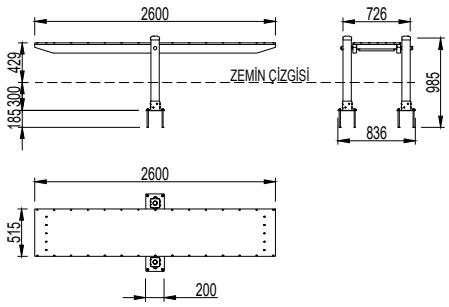
2600
726
429
300
185
ZEMİN ÇİZGİSİ
985
836
2600
515
200